HEALTHCARE FURNITURE
IMPROVING PEOPLE'S LIVES

TECHNICAL DATA SHEET FT 144

STELLA BED



REFERENCES

10.CM.6099 - 10.CM.6099.1 - 10.CM.6099.2 - 10.CM.6099.3

INTENDED USE

Electrically articulated, height-adjustable bed structure intended for users to rest in home-care settings, promoting maximum autonomy in the treatment or alleviation of illness, injury or disability.

TECHNICAL CHARACTERISTICS

. Structure comprising the bed base and headboard/footboard assemblies with 4 Ø100 mm castors (all 4 with brakes), with or without beech-effect MDF side rails. Prepared to accommodate an IV pole, lifting pole and mattress. The headboard/footboard assemblies are manufactured with an internal frame of 60x30x1.5 mm and 45x20x1.5 mm rectangular E235 steel tubing and Ø32x1.5 mm round E220 steel tubing, MIG-welded manually or using a robotic cell, incorporating a motor for height adjustment and fully clad in beech-effect melamine, or with two melamine panels in the LIGHT version. The bed base, identical in all 4 versions, is manufactured mainly from 45x25x1.5 mm rectangular ST-34.2 steel tubing, 40x20x2 mm E235 steel tubing and 25x25x1.5 mm square ST28 steel tubing, MIG-TIG welded using a robotic cell, with degreasing and phosphating of the surface before epoxy coating.
. Four-section mattress platform with beech slats, articulated in 3 sections by an electric motor operated via handset, allowing height adjustment (350 to 750 mm) and Trendelenburg and Anti-Trendelenburg positioning via the motors installed in the headboard and footboard assemblies.
. Motors with CE marking and a 2-year warranty against proven manufacturing defects. This warranty does not cover damage caused by improper handling of the motor, cable, handset, transformer or plug. To ensure continuous operation, the bed can optionally be fitted with a battery for use in the event of a power cut.
. Each of the 4 versions includes a Transport Kit that allows easy final assembly.
. Complies with safety standard EN 60601-2-52.

ACCESSORIES:

. IV pole - Ref. 10.AC.1075/.O/ 10.AC.1076/.O
. Lifting pole - Ref. 10.AC.1025
. Mattress support handle - Ref. 11.CME.001
. Simple BD mattress with 6 grooves, 1820x890x100 mm, waterproof and fire-retardant cover with L-shaped zip - Ref. 10.AC.1039.

DIMENSIONS: Mattress platform 1900 x 900 x 350 to 750 mm (length x width x adjustable height).

WEIGHT: 56 kg (approximately, depending on reference)
Standard colour: Grey frame

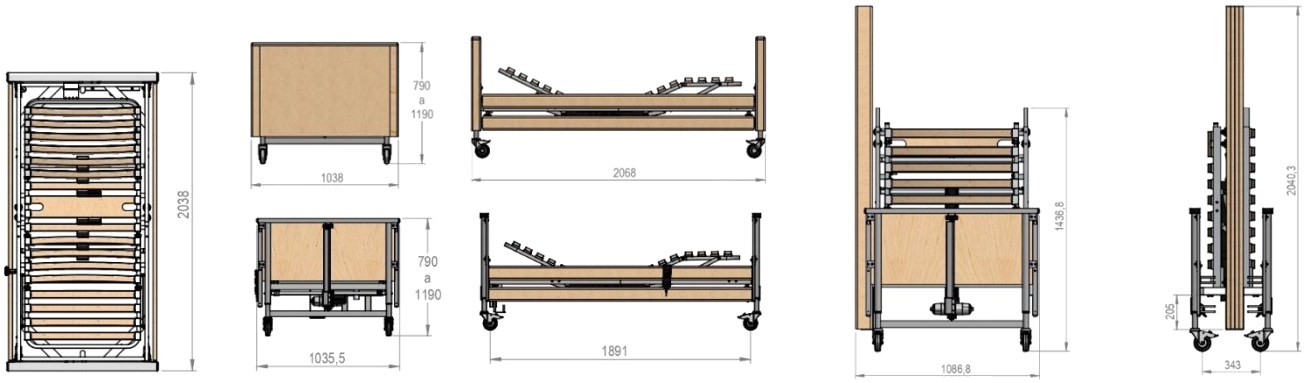

JMS - Industria de Mobiliário Hospitalar, S.A.
Zona Industrial do Bunheiro - Rua da Zona Industrial, n.° 26 - 3870- 021 MURTOSA
T +351 234 880 018 | F +351 234 880 017
jms@jmshospitalar.com
www.jmshospitalar.com

SAFETY

. The bed must not be used by patients with psychiatric disorders or as a transport stretcher (it may, however, be moved within the room with the patient in the bed). Designed for adult patients weighing less than 135 kg and aged 12 years or over, for short- and long-term home care, not for use in a hospital environment.

. When the patient gets into or out of the bed, it must be adjusted to an appropriate height and always remain locked to prevent unexpected movement that could endanger the patient or user. Any intervention and/or maintenance work or fitting of accessories to this product requires authorisation from JMS, S.A.

. Be aware of the risk of crushing at the articulated joints.



. Avoid spilling liquids on the motor and handset. Keep abrasive materials and heat sources away because the product contains materials that may ignite.

. The bed must only be used indoors. Before using any JMS product, always consult the user manual.

. The expected service life of the bed is five years, provided it is used correctly in accordance with the user manual.

STORAGE/CARE

. The bed is supplied partially disassembled and packed in a Transport Kit, which also facilitates transport to the end user and subsequent assembly; only 1 person is required for this purpose.

. The bed is packed in cardboard and/or film. It must be stored in locations with controlled temperature and humidity (temperature below 25°C, humidity below 60%) so as not to damage the packaging or product.

. It must be stored in locations protected against falling objects, in an upright position on its castors, and must not be stacked.

. During cleaning, do not use detergents, alcohol-based solutions or materials that may damage the product. Use a soft damp cloth and then wipe with a dry cloth.

QUALITY

. All our products are designed using raw and auxiliary materials that are rigorously inspected on receipt and incorporated into the manufacturing process defined according to internal procedures within the implemented NP EN ISO 9001 quality management system.

. JMS products are covered by a warranty. Please refer to the Warranty Certificate currently in force at the company.